REVISION HISTORY						
CHG NO	ZONE	REV	DESCRIPTION	DATE	BY	APPROVED
96-00043	B2	1	ADDED GENERIC OUTLINE DATA BLOCK	1-23-96	DMS	MJC
99-00000	ALL	2	REVISED FOR APPV'D ANSI FORMAT	06-25-99	JTT	ERH
00-0579	ALL	3	UPDATED TO CURRENT STANDARDS	12-12-00	DMM	DMM

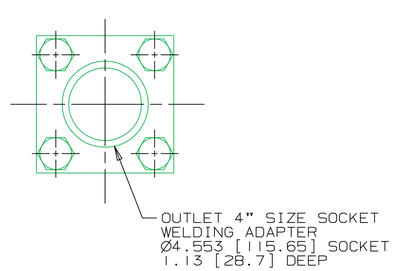

SOCKET WELD OUTLET OPTION

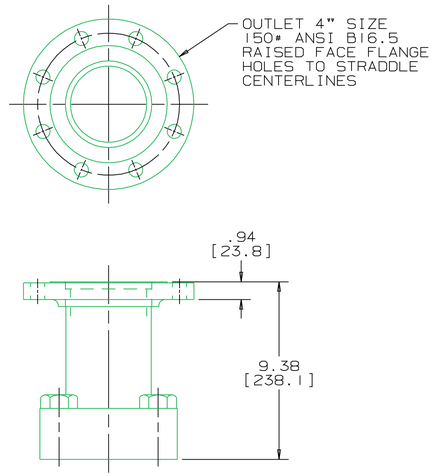

150# RF OUTLET OPTION

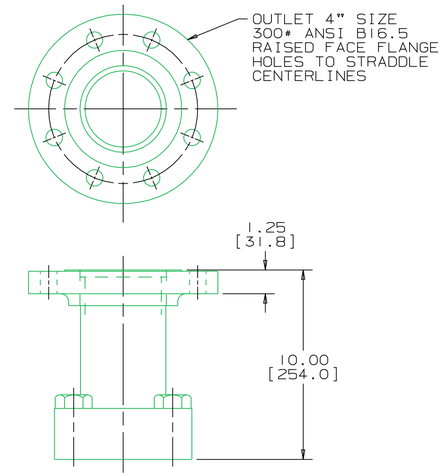

300# RF OUTLET OPTION

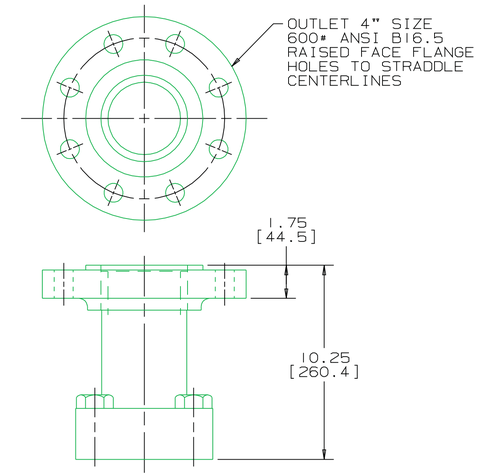

600# RF OUTLET OPTION

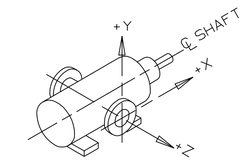

COORDINATE SYSTEM FOR MAXIMUM PUMP FORCES (F) AND MOMENTS (M)

INLET:
FX=375 LBF[1670 N] MX=625 LB FT[847 N·m]
FY=375 LBF[1670 N] MY=625 LB FT[847 N·m]
FZ=375 LBF[1670 N] MZ=625 LB FT[847 N·m]

OUTLET:
FX=300 LBF[1330 N] MX=500 LB FT[678 N·m]
FY=300 LBF[1330 N] MY=500 LB FT[678 N·m]
FZ=300 LBF[1330 N] MZ=500 LB FT[678 N·m]

FORCE AND MOMENT VALUES ARE RELATIVE TO CENTER OF INLET AND OUTLET PORT FACES.

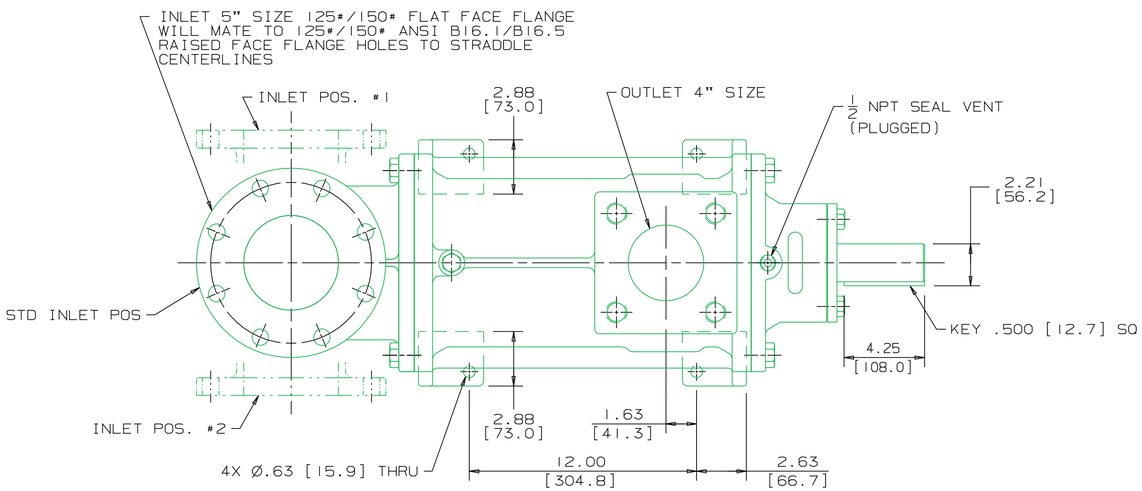

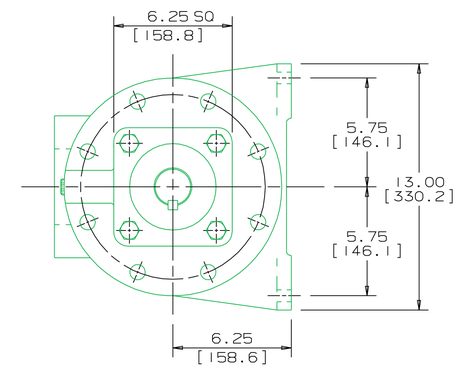

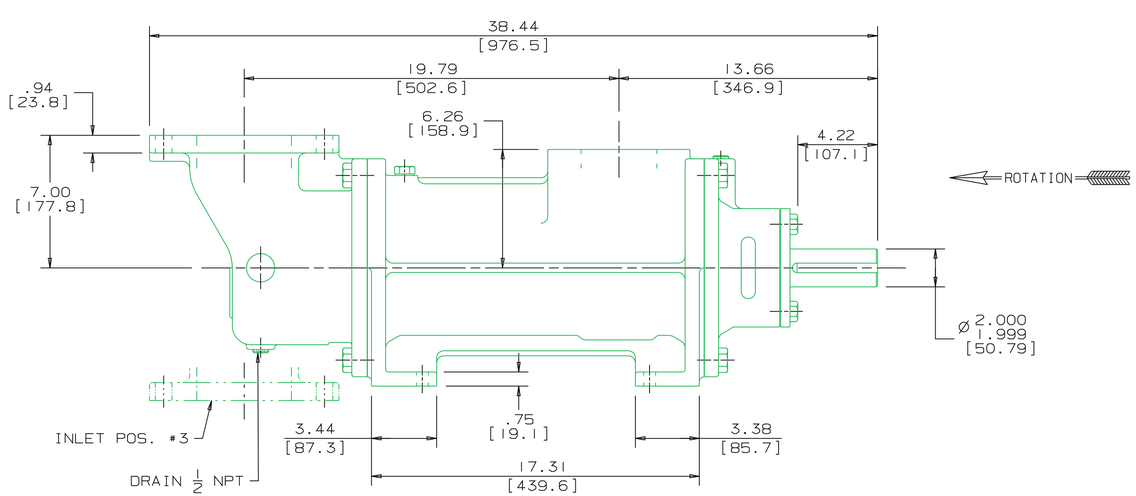

NOTES:
1. UNLESS OTHERWISE SPECIFIED, ALL DIMENSIONS ARE IN INCHES. DIMENSIONS IN [ ] ARE MILLIMETERS.
2. TO MAXIMIZE SEAL LIFE, SEAL VENT MUST BE ORIENTED UPWARD (12 O'CLOCK) WHEN PUMP IS INSTALLED HORIZONTALLY. THIS IS NORMAL VENT ORIENTATION WHEN PUMP FEET ARE ORIENTED DOWNWARD. SEAL VENT ORIENTATION IS NOT CRITICAL WHEN PUMP IS INSTALLED WITH SHAFT VERTICALLY UPWARD.
3. PORT, FOOT, AND SEAL VENT ORIENTATIONS ARE SUPPLIED AS SHOWN ON DRAWING UNLESS OTHERWISE SPECIFIED.
4. ALTERNATE INLET PORT POSITIONS ARE PROVIDED IF SPECIFIED ON ORDER. AVAILABLE POSITIONS ARE: STANDARD, POSITION #1, POSITION #2 OR POSITION #3. ALL INLET PORT POSITIONS ARE RELATIVE TO OUTLET PORT.
5. ESTIMATED WEIGHT (WITHOUT PORT ADAPTERS) 410 LBS [186.0 kg].

DRAWING CERTIFICATION
CUSTOMER NAME ----------
CUSTOMER PO NUMBER ---------
CUSTOMER PART NUMBER -------
BOM NUMBER ----------
PUMP TYPE ----------
SHAFT ROTATION ----------
INLET PORT POSITION --------
OUTLET PORT ADAPTER OPTION -
OTHER INFORMATION
CERTIFIED BY ----------
CERTIFIED DATE ----------
IMO ORDER NUMBER ----------
DATA REVISION NUMBER -------

FOOT MOUNT, RIGHT ANGLE INLET
STEEL 3D-337/350

MATERIAL
PROCESS
COMMENTS:
STANDARD ROTATION IS CLOCKWISE WHEN VIEWED FROM COUPLING END OF PUMP. SUCTION STRAINER AND DISCHARGE RELIEF VALVE MUST BE PROVIDED.
ALIGNMENT:
UNITS ARE ACCURATELY ALIGNED AT THE FACTORY. ALIGNMENT SHOULD BE CHECKED BEFORE STARTING TO ENSURE THAT IT IS STILL WITHIN .005 [0.13] F.I.M.
PRESTARTING:
FLUSH SUCTION PIPING BEFORE CONNECTING PUMP. PRIME AND VENT PUMP. DO NOT START PUMP WITH VALVES CLOSED. READ INSTRUCTION MANUAL FOR DETAILS BEFORE STARTING.

DRAWN	WLW	11-17-94
CHECKED	MJC	11-17-94
APPD	MJC	11-17-94
METHODS		

THIRD ANGLE PROJECTION
FIRST ORDER 092207
USED ON 3222/156

CIRCOR | IMO®

TITLE
OUTLINE STANDARD (STEEL)
AG3D_S_-337/350__

SIZE	CAGE CODE	DWG NO
D	59180	SDD18096

SCALE 1/4 WEIGHT SEE NOTE 5 SHEET 1 OF 1