OPERATING AND MAINTENANCE INSTRUCTIONS

PUMP TYPE 216.40

To

Pump model
Pump number

Our order
Your order
Order date
Reference
Item number
Destination
Plant

Before storing, installation, operation or maintenance read this manual

Manual No: SRM00115
Revision: 00

ABOUT THIS MANUAL

This manual contains detailed instructions for the storage, installation, operation and maintenance of the Houttuin twin screw pump.
To get maximum versatility from the pump, all operators should carefully read and follow the instructions in this manual.
For dismantling and re-assembly chapter 7 has to be consulted.
Please keep this manual in a handy place near the pump-unit.

Warranty

If the pump is used for conditions other than stated in the order confirmation or modified without written consent of Houttuin all guarantee claims become invalid.

Dismantling of the screw pump during the period of guarantee may only be done with a prior written consent of Houttuin BV., otherwise all guarantee claims become invalid.

A copy of the specific warranty terms applicable to your Houttuin product and replacement parts can be obtained from your local Sales and Service Office.

Notice

This document contains proprietary information, which is protected by copyright. All rights are reserved. No part of this document may be photocopied, reproduced or translated to another language without the prior written consent of Houttuin BV.
The information contained in this document is subject to change without notice.

Service

For installation, maintenance and repair of the pump you can always call the Service Department of Houttuin B.V., experienced service people are available on appointment.

Houttuin B.V.
Service Department
Postbus 76
3500 AB Utrecht
The Netherlands
Telephone number: +31(0)30-2484611
Fax number: +31(0)30-2411845

TABLE OF CONTENTS

1 INTRODUCTION
1.1 Operating principle
1.2 Shaft sealing arrangements
1.3 Relief valve

2 SAFETY REGULATIONS
2.1 Transport
2.2 Preparation for installation
2.3 Earthing
2.4 Emergency stop
2.5 Pipe accessories
2.6 Check valve
2.7 Cooling of bearings and timing gears
2.8 Start-up
2.9 Safety valve set pressure

3 TRANSPORT
3.1 Transport

4 INSTALLATION
4.1 Preparation for installation
4.2 Cleaning
4.3 Location
4.4 Emergency stop
4.5 Earthing
4.6 Foundation
4.7 Base plate
4.8 Alignment of pump and motor
4.9 Alignment procedure for horizontal mounted pumps
4.10 Piping design
4.11 Pipe accessories
4.11.1 Suction strainers
4.11.2 Check valve

5 OPERATION
5.1 Before start-up
5.2 Start-up
5.3 While the pump is in operation
5.4 After a long time shut down

TABLE OF CONTENTS

6 MAINTENANCE
6.1 Schedule
6.2 Spare parts
6.3 Lubrication table
6.4 Lubrication chart
6.5 Bolt tightening torques

7 DISMANTLING AND RE-ASSEMBLY
7.1 General instructions for dismantling the screwpump
7.2 Dismantling
7.3 Re-assembly

8 TROUBLESHOOTING

9 LONG TERM STORAGE
9.1 Prescription of preservation - internal
9.2 Shaft seal treatment
9.3 Prescription of preservation - external

1 INTRODUCTION

1.1 Operating principle •••

The Houttuin geared twin screw pump is a rotary positive displacement pump which consists of two counter-rotating screw shafts. The screws on these shafts mesh together retaining a limited clearance and rotating freely inside the liner or pump casing bores.
This creates a vacuum (under-pressure), which causes the fluid to flow towards the pump. The pumped fluid enters through the suction inlet, the flow is divided and enters at the ends of the pump and travels to the centre of the pump and discharge. The centre part of the cylinders has an open connection towards the discharge.

The torque is transmitted from the driver through the driven screw shaft to the short shaft by means of the timing gears. Both shafts are supported by bearings and are axially fixed at the non-driven end of the shafts.
The bearings are not subjected to any load because of the hydraulic axial balance between the screws.

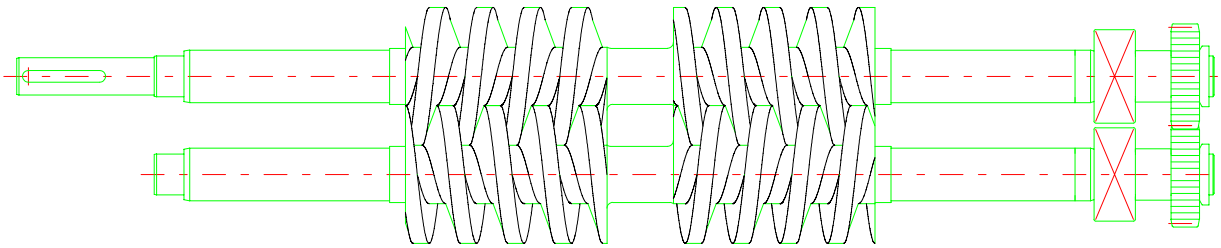

Fig. 1.1 Screws with timing gears

1.2 Shaft sealing arrangements •••

Due to their specific design, these pumps are executed with four single mechanical seals. The selection of these seals depends on temperature and properties of the liquid handled as well as on specific operating conditions.

1.3 Relief valve •••

The safety valve connects discharge and suction side of the pump to protect the pump against over pressure. The valves are also available with back to tank design.

Relief valve can be utilised to reduce the starting torque. Hand wheel feature permits opening of the valve to lower the pressure and the starting torque during start up.

2 SAFETY REGULATIONS

2.1 Transport •••

- Take care when moving the pump. Rough treatment or lifting in an unsuitable way may cause permanent damage. The safe lifting methods are illustrated in chapter Transport.
- The pump should never be lifted by the shaft-end. Relief valve handwheel may have to be removed to accommodate the lifting straps.

2.2 Preparation for installation •••

- After receipt, each pump should be thoroughly checked. Damage must be reported to the Houttuin office or representative, and the transportation company immediately. Any claims for damage must be known within one week after receipt of the goods.
- After receipt of the pump, it should be stored in a dry area. The shipping crate is only suitable to protect the pump for a maximum of 90 days after shipment from the factory. This period may be shorter in case of poor atmospheric conditions. Special packing for long term storage can be supplied upon request.

2.3 Earthing •••

Ensure that the pumpunit has a proper ground connection.

2.4 Emergency stop •••

Houttuin advises to integrate the unit in an emergency stop system.

2.5 Pipe accessories •••

Manometers should be placed before and behind the strainer to check when cleaning is to be carried out.

2.6 Check valve •••

If the discharge head is high and the viscosity of the liquid is low, it is recommended to install a check valve in the discharge line. This is to protect the pump against reverse rotation in the event of backflow when the pump is shut down. This also allows parallel operation of another pump in the same system.

2.7 Cooling of bearings and timing gears •••

- When the temperature of the lubricating oil in the gearbox should reach a maximum level, due to the friction of the gears at higher power consumption, it may be necessary to equip the gearbox with a cooling system to cool the bearings and timing gears.
- Prevent contact with gearbox, surface temperature can rise up to 120 ^{0}C (248 ^{0}F)

2.8 Start-up •••

The pump must not be run unless all protective guards supplied with the equipment are in position.
Be secure the pump cannot be started before maintenance is executed.

2.9 Safety valve set pressure •••

NOTE!! : The adjustment pressure may only be changed with a prior written consent of Houttuin BV.

3 TRANSPORT

3.1 Transport •••

Take care when moving the pump. Rough treatment or lifting in an unsuitable way may cause permanent damage. The safe lifting methods are illustrated below. The pump should never be lifted by the shaft-end. Relief valve hand wheel may have to be removed to accommodate the lifting straps.

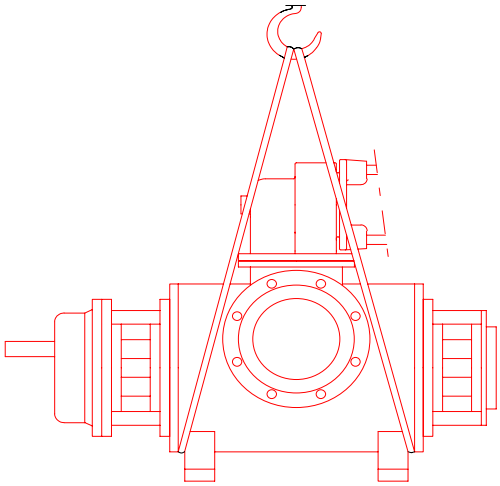

Fig. 3.1 Lifting the pump

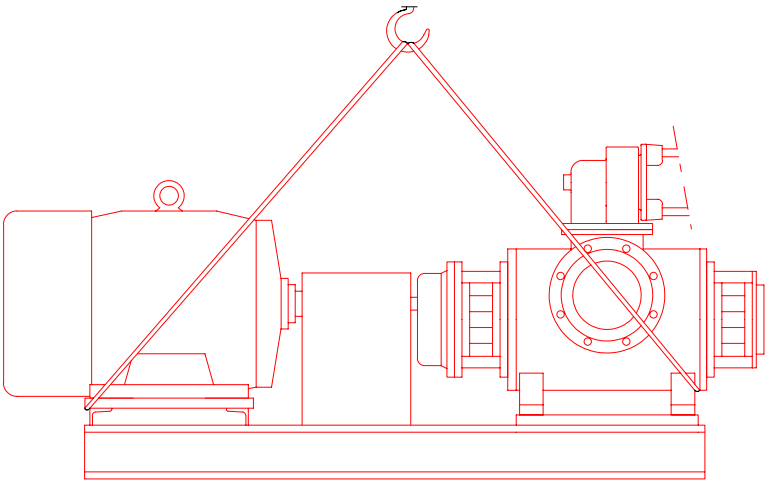

Fig. 3.2 Lifting the pump unit

4 INSTALLATION

4.1 Preparation for installation •••

- After receipt, each pump should be thoroughly checked. Damage must be reported to the Houttuin office or representative, and the transportation company immediately. Any claims for damage must be known within one week after receipt of the goods.
- If the pump will not be installed immediately Houttuin advises storage in a dry area.

4.2 Cleaning •••

For the protection against corrosion during the period between leaving the factory and installation the pump is preserved. The standard preservation is for a period of 90 days.
Special packing for long term storage can be supplied upon request.
Before installation the external and internal preservations must be removed.

Cleaning:

- The preservation of the external surfaces can be removed with a cloth soaked in mineral spirit or kerosene.
- The internal preservation can be removed with a proper solvent. It is best to rinse the pump with the liquid to be pumped.

4.3 Location •••

Position the pump as close as possible to the tank. Ideally the pump should be located in a well-ventilated room with sufficient space on all sides for easy maintenance. If it is necessary to place the pump in a pit take care to prevent flooding.

4.4 Emergency stop •••

NOTE!! : Houttuin advises to integrate the unit in an emergency stop system.
Houttuin advises to make provisions against accidental start-up of the unit before maintenance activities are executed.

4.5 Earthing •••

Ensure that the pump unit has a proper ground connection.

NOTE!! : In any case read the manual of the motor.

4.6 Foundation •••

The foundation should be designed for supporting the weight of the unit filled with the fluid to be pumped.

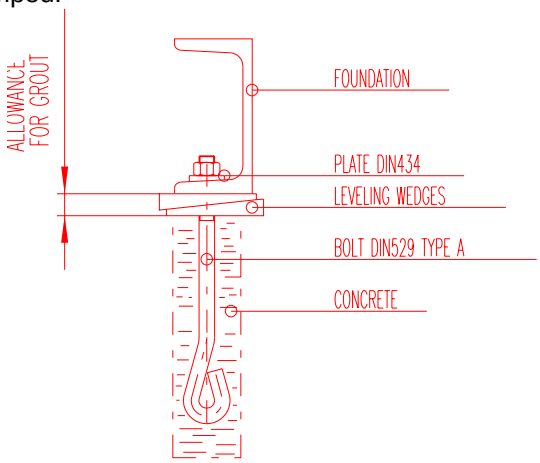

Fig. 4.1 Foundation preparation

- When concrete is poured, holes should be kept open at the positions indicated on the baseplate drawing for placing the bolts later.
  The surface of the concrete should be left rough in order to permit the application of a thin layer of mortar, which serves to support the entire base plate.
- After the concrete has hardened, place the pump-unit together with the bolts in its place.
- With levelling wedges the unit can be levelled.
- The holes can now be filled, and this goes also for the void between the base plate and the concrete. If a concrete floor is already available, use can be made of wedge bolts.

4.7 Base plate •••

Place the base plate on wedges. The wedges must be placed at the bolts' locations.
It is also possible to thread nuts on the stud bolts and place the base plate on them.
After levelling the base plate it should be tightened with nuts.

The height between foundation and base plate must be approximately 30 mm / 1,2". The opening between foundation and base plate should be boarded with planks to prevent loss of mortar.
Now the easy flowing mortar can be poured through holes in the base plate to fill up the space.

NOTE!! : If sufficient bolts are used to support the base plate, it is not absolutely necessary to grout as well.

4.8 Alignment of pump and motor •••

- The accuracy of alignment of pump and motor is of great importance for the working life of coupling and bearings. A flexible coupling is not designed to absorb misalignment. The purpose of the coupling is to permit some radial movement between pump and motor shaft during power transfer.

  A major misalignment will cause a shorter coupling life and excessive bearing wear.
  It will also result in vibration. Alignment is best done with a dial gauge. Axial or radial deviations may not exceed 0,25 mm / 0,010”. After having had the pump in operation for about one week, it is essential to recheck the alignment. This should take place after switching off the motor before the pump has had time to cool down.

- For good operation it is necessary to mount the pump securely. Nuts must be tightened evenly to prevent distortion.

4.9 Alignment procedure for horizontal mounted pumps •••

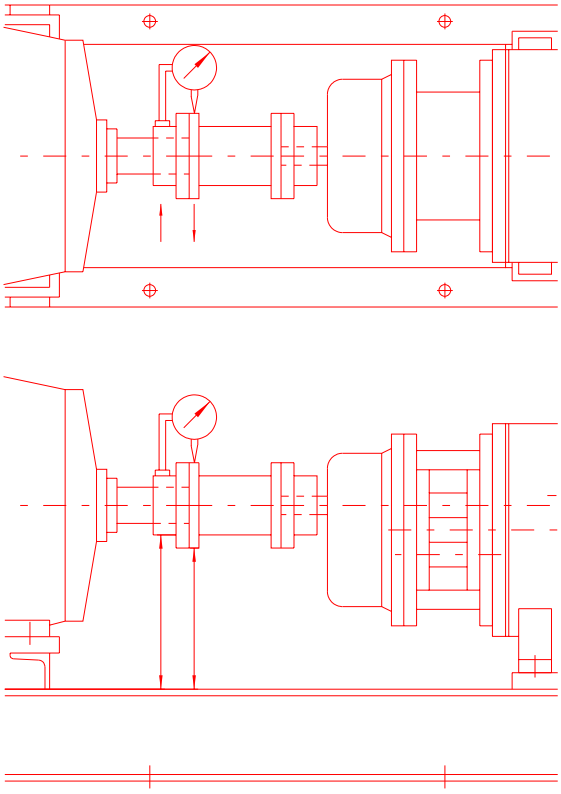

Fig. 4.2 Alignment

1. Align motor shaft and pump shaft vertically by using shims.
2. Now align motor shaft and pump shaft horizontally by pushing.
3. Align the coupling halves.

4 INSTALLATION

Sub 1.

Vertical alignment (dismounted coupling piece(s)).
Connect the dial gauge to the coupling half of the motor.

1. Rotate the shaft through a ¼ revolution.
2. Adjust the gauge to zero.
3. Rotate the shaft through a ½ revolution. The difference between the gauge reading now and before should not exceed 0,25 mm / 0,010”. If the deviation is larger, the motor shaft is to be adjusted and the check should be carried out again.

Sub 2.

Check of horizontal alignment (dismounted coupling piece(s)).
Connect the dial gauge to the coupling half of the motor.

1. Rotate the shaft several times through 90^0 and read the gauge.
2. The two readings in opposite position should not differ more than 0,25 mm / 0,010”.
3. If it is more, the parallelism of the pump-motor combination must be realigned.

Sub 3.

Alignment of coupling (mounted coupling piece(s)).

1. The next thing to be done is to check whether the coupling halves are parallel. A micrometer should be placed at 4 places between the coupling halves; at top, bottom and at both sides. If the variation in reading is less than 0,25 mm / 0,010” the pump-motor combination can be considered parallel and the motor can be anchored down.
2. If the variation is larger than 0,25 mm / 0,010” the motor must be adjusted.

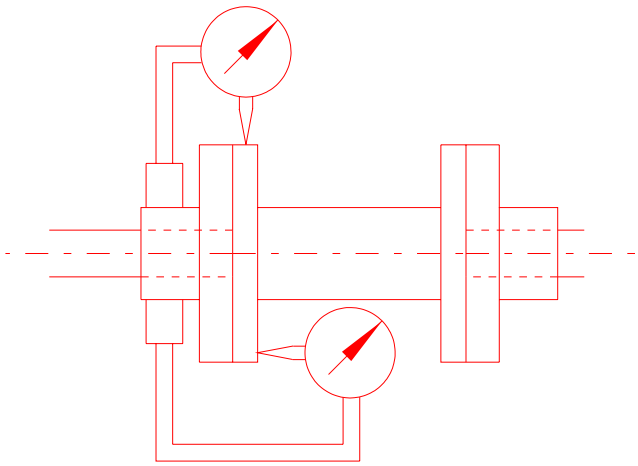

Fig. 4.3 Alignment

NOTE!! : The pump must not be run unless all protective guards supplied with the equipment are in position.

4.10 Piping design •••

- Because the screw pump has close clearance between its working parts, it is essential that the suction line is carefully and thoroughly cleaned before the connection is made.
- If the pump has a suction lift, the suction line should be adequately sized to reduce friction losses.
  Errors in the pipe layout, such as excessively long or small diameter suction lines, too many bends, valves, and elevated parts in the line cannot be overcome by the pump since the limiting factor is the atmospheric pressure. This pressure is a physical phenomenon independent of any pump. The result will inevitably be cavitation, noise, vibration, and faulty operation.
- After installing the pump unit on foundation, the pipelines can be connected. For correct location of pipes, refer to the pump drawing. Pipe adapters should be short and direct.
  Bends should be laid out with the largest possible radius. All pipes should be fixed independent from the pump flanges. Pipelines, which may have to withstand elevated temperature, must be provided with expansion joints to absorb expansion of the pipe. Tensional or compressing loads on the pump could result in distortions causing wear or even seizure.
- To check whether the pipes are correctly aligned, bolts should be inserted through the boltholes of pump flange and pipe flange. If these bolts can be pushed by hand and the flanges are parallel, the pipelines are fitted stress free. Some clearance between the pump and pipe flange should be maintained to allow for the flange gaskets.

4.11 Pipe accessories •••

4.11.1 Suction strainer •••

Houttuin recommends the use of a strainer at the suction side; at least temporarily to ensure that no dirt or welding beads remain in the system. The strainer should be made of reinforced 20 mesh wire. The total free flow area must be 4 to 5 times larger than the cross sectional free flow area of the suction line. If the medium has a viscosity above 20 cSt (100 SSU), the area should be enlarged to 5 or 6 times the size of the pipe.

NOTE!! : Manometers should be placed before and behind the strainer to check when cleaning is to be carried out.

The pressure loss over the strainer should be no more than 127 mm Hg (5 inches Hg). In general, suction strainers can be used with any liquid except when the viscosity is very high. In these cases, the strainer should be eliminated and careful cleaning of the suction line is recommended to remove all foreign particles.

4.11.2 Check valve •••

If the discharge head is high and the viscosity of the liquid is low, it is recommended to install a check valve in the discharge line. This is to protect the pump against reverse rotation in the event of backflow when the pump is shut down. This also allows parallel operation of another pump in the same system.

5 OPERATION

5.1 Before start-up •••

1. Inspect all pipelines, check for any leakage or stress in the system. Clean all pipes, valves, tanks and filters to be sure all foreign materials have been removed. Check all valves and meters.
2. Check to be sure the pump shaft can rotate without difficulty; if not, the cause of blockage or friction should be corrected. Each pump is tested before leaving the factory, but transport could have had some effect.
3. Resistance in turning the shaft must be expected with pumps equipped with mechanical seals.
4. Check the direction of rotation of pump and motor to be sure they are the same. The pump is fitted with an arrow to indicate the direction of rotation.
5. Fill the gearbox with oil (if applicable). Refer to the lubrication chart for type and quality of the oil. The pumps should always be filled with liquid before starting. (See chapter Maintenance)
6. If the pump is fitted with mechanical seals it is most important to fill the pump before start-up either with the pumped liquid or with a neutral compatible liquid to protect the seal faces from running dry.
7. Auxiliary flushing or lubrication lines should be examined for any damage or distortions.
8. Open all valves.
9. If the pump is provided with a safety valve with handwheel, it should be opened completely using the handwheel.
10. In case the timing gearbox is provided with a cooling coil, the quantity of cooling liquid required depends on the pump size (See chapter 6)
11. Read the driver instruction manual to determine if a special coupling is required.
12. If the pump has a suction lift, the de-aeration valve in the discharge line should be opened and the pipe filled with liquid. This is only necessary for new installations or for reinstalled pumps.

5.2 Start-up •••

1. If the pump is provided with a heating feature, this heating should be turned on until the pump has reached its normal operating temperature, after that heating must be turned off and the motor can be started.
2. As soon as the pump has reached the rated speed, the safety valve should be closed.
3. The absorbed power and the suction and discharge pressure should be checked against the data sheet.

NOTE!! : Prevent contact with gearbox, surface temperature can rise up to 120 ^{0}C (248 ^{0}F)

5.3 While the pump is in operation •••

1. Check the temperature of bearings and gearbox. It is to be expected that this temperature will be high in these areas at start-up, and after a short period of time the temperatures will settle down to operating temperature.
2. If the pump is part of a closed system, the discharge line should be de-aerated during operation.
3. When the pump has reached operating conditions, anyway after 24 hours, check the tightening torques of the bolts and nuts (See chapter 6). Repeat this check after one week of operation.

5.4 After a long time shut down •••

The pump should not remain unused for long periods. The pump should be operated once a week if possible. If the pump will be idle for longer periods, it is advisable to rotate the screwshafts by hand if possible, on a two-weekly schedule.

It is easy to detect if any of the internal parts are contacting by rotating the shaft by hand.

When starting after a long time shut down, let the pump run for a short period without pressure to allow proper wetting of all rotating parts.

6 MAINTENANCE

Because of their construction Houttuin screw pumps require a minimum of inspection and maintenance. However, the following instructions should be followed to ensure trouble free operation.

6.1 Schedule •••

Daily:
1. Check the level of the oil in the gearbox (it should cover half the sight glass)

Weekly:
1. Let the unused pump run for 30 minutes at full load.
2. Check any automatic controls and / or regulating valves.

Quarterly:
1. Check flange bolts and nuts for correct tightness.
2. Check functioning of the pressure relief valve.

Yearly:
1. Check the alignment of the coupling halves, preferably immediately after ending the pump operation, while the temperature is still at operating level.
2. Check capacity and absorbed horse power. Capacity- and power loss will indicate wear.
3. In case of wear, screw shafts and cylinders must be checked for damage.
4. Check the screw flank clearance, as well as the clearance between the timing gears.

Every 4000 to 5000 working hours
1. The axial clearance of the bearings is to be checked.
   The axial clearance of the shafts should not exceed 0,2 mm / 0,0080”.
2. If the clearance between the timing gears is more than 0,5 mm / 0,0020” the timing gears should be replaced.

Refer to the lubrication chart in this chapter for the quantity and quality of lubricating oil to be used and schedule for changing the lubricant.

NOTE!! : After the first 50 working hours of pump operation the lubrication oil should be changed. Subsequent renewals are to be made in accordance with the lubrication chart.

Emergency stop:

NOTE!! : Houttuin advises to make provisions against start-up of the unit before maintenance activities are executed.

6.2 Spare parts •••

To reduce the time the pump is out of order, it is advisable to keep the following parts in stock:

- 1 set of screw shafts complete with timing gears,
- 1 set of bearings,
- 1 set of gaskets,
- 1 set of mechanical seals.

When ordering spare parts, the following information should be indicated on the purchase order:

- Pump serial number (see title page).
- Pump series (see title page).
- Code number of required spares as given in the parts list (see supply).

NOTE!! : To ensure a safe and good functioning of the pump we advise to buy genuine spare parts according the specifications in the partslist.

6.3 Lubrication table •••

Pump series 216.40:
Lubrication of timing gears and ball bearings driven side: oil.
Lubrication of ball bearings non driven side: greased for life.

Required amount of oil in gearbox in litres. (1 litre = 0,264 US Gallon)

Size	Series 216.40
88	1.1
105	1.5
118	2.6
135	2.6
150	4.4
165	5.1
180	6.6
195	8.1
210	11.1
225	13.2
244	14.3
265	19.2

NOTE!! : This amount is necessary for the maximum oil level, i.e. upper edge of the sight glass. Fill up the gearbox if oil has reached the minimum level, i.e. lower edge of the sight glass.

6.4 LUBRICATION CHART					
Recommended oils					
Temperature of the pumped liquid	100 ^{0}C	160 ^{0}C	240 ^{0}C	300 ^{0}C	350 ^{0}C
Maximum temperature of the gearbox	80 ^{0}C	120 ^{0}C	120 ^{0}C [1)]	120 ^{0}C [1)]	120 ^{0}C [1)]
Oil change interval-running hours	4000 or 1 year	4000 or 1 year	2000 or ½ year	2000 or ½ year	2000 or ½ year
	standard acc. ISO 3448 [2)]				
Marks	VG 100	VG 220	VG 680	VG 680	VG 680
BP	Energol GR-XP 100	Enersyn HTX 220	Enersyn HTX 220	Enersyn HTX 220	Enersyn HTX 220
CASTROL	Castrol Alpha SP100	Castrol Alpha SP220	Castrol Alpha SP320	Castrol Alpha SP320	Castrol Alpha SP320
CHEVRON	Gear Compound EP 150	Gear Compound EP 220	Gear Compound EP 320	Synth. Gear Lub. Tegra 220	Synth. Gear Lub. Tegra 220
ELF	Reductelf SP 100	Reductelf synthese 220	Reductelf synthese 220	Reductelf synthese 460	Reductelf synthese 460
EXXON marine and / or industrial	Spartan EP 100 Teresso 100	Spartan EP 100 Teresso 100	Spartan EP 680 Cyclesso 680	Spartan EP 680 Cyclesso 680	Spartan EP 680 Cyclesso 680
MOBIL	Mobil SHC 630	Mobil SHC 630	Mobil SHC 634	Mobil SHC 634	Mobil SHC 634
SHELL	Omala 150	Omala 220	Omala 320	Tivela WA	
TOTAL	Carter EP 100	Carter EP 220	Carter EP 320	Crotusa SY 150	Crotusa SY 150
Q8	Goya 100	Goya 220	Gade 460	Gade 460	Gade 460

[1)] Temperature up to 160 ^{0}C only when the pump is standby.
[2)] General calculations are made with minimum viscosity 15 mm^2/sec at maximum gearbox temperature.

6.5 Bolt tightening torques •••

material	**steel 8,8**	**steel** **9 SMn 28**	**bronze** **CuZn 35 Ni 2**	**stainless steel** **X 10 CrNiMoTi**
application	tap bolt stud bolt socket screw	stud bolt	stud bolt	tap bolt stud bolt
diameter **d (mm)**	**torques (Nm)**			
M6	10	7		8
M8	25	20		20
M10	50	35		40
M12	80	60		70
M16	200	150	100	160
M20	400	280	210	210
M24	680	480	360	360

Conversion factors

1N (Newton) = 1/4,45 = 0,225 lbf
1m (meter) = 1000mm = (1/305x10^3) = 3,279 ft
1Nm (Newtonmeter) = 1/4,45x1/305x10^3 = 0,737 lbfft

7 DISMANTLING AND RE-ASSEMBLING

7.1 General instructions for dismantling the screw pump •••

NOTE!! : Dismantling of the screw pump during the period of guarantee is only allowed with a prior written consent of Houttuin BV., otherwise all guarantee claims become invalid.

Before dismantling is started be secure the following actions are finished:

- Disconnect energy supply of the motor.
- Close all valves in the suction and pressure lines.
- Drain the fluid from the pump.
- Drain the oil from the gearbox.
- Remove pressure and vacuum gauges.
- Remove, when necessary, the suction and pressure pipe.

7.2 Dismantling •••

- Mark the parts that will be dismantled.
- Use correct tools.
- Before reassembly clean the parts.
- Replace worn bearings.
- Replace flange packings.
- Replace lip seals and ‘O’-rings.
- For the correct bolt tightening torques see chapter 6.

7.3 Reassembly •••

- After reassembling the pump, the pump unit must be aligned.
  (See chapter 4)
- After aligning the pump unit the protective guards must be placed in position.
- After finishing the reassembly follow the start-up procedure described in chapter 5.

NOTE!! : The Houttuin screw pumps are precision machines and it is obligatory that trained and experienced personnel carry out dismantling and re-assembly. We advise Houttuin personnel. Detailed dismantling instructions are available on request.

8 TROUBLE SHOOTING

Fault finding chart

Pump fails to prime	Lack of output	Hydraulic noise	Motor overloading	Irregular delivery	Pump seizes	Pump becomes warm	CAUSE	ACTION
x							Rotation incorrect	Reconnection of E-motor
x							Pump is not filled	
x	x	x					Air leaks in suction system	Check flange connections
x	x	x					Shaft seal(s) leaking	
x	x	x					Vacuum too high	Check NPSHA + R
x	x			x		x	Relief valve leaking	Check set pressure
x	x	x	x	x		x	Viscosity too high	Check data-/performance sheet
	x						Motor speed too low	
	x	x					Vapour pressure of the medium too high	
	x	x		x			Suction pipe too close to the tank bottom	
	x	x		x			Retention time of fluid in tank too short to separate the air	
		x	x			x	Incorrect alignment	
		x	x			x	Motor speed too high	
		x					Velocity in pipeline too high	
			x			x	Discharge pressure too high	
					x		Foreign matter in screw clearances	
			x		x	x	Damaged ball bearings	
			x		x	x	Pipe work incorrectly aligned to pump casing	
		x					Suction pipe too small	

9 LONG TERM STORAGE

When pumps are stored or unused for long periods, rust may occur. Since rust has an adverse effect on the working life of the pump, it is advisable to apply protection to the bare metal surfaces.

9.1 Prescription of preservation - internal •••

The inside of the gearbox and pump casing should be preserved with a proper preservation medium. For example:

Exxon RS 335
Shell Ensis oil 1
Valvoline Ritzol R6
Mobil Arma 523 / 524

9.2 Shaft seals treatment •••

The shaft seals should be greased with a grease which can be removed later.

9.3 Prescription of preservation - external •••

The external machined parts must be protected with for example:

Exxon R6 324
Shell Ensis MD
Valvoline 846 K19

NOTE!! : All drilled and tapped holes are to be plugged. Flanges are to be covered with blanks. Periodical checks of the stored pump should be made. The screwshafts are to be turned once per 14 days. After rotation the position of the shafts must be different from what they were before the rotation.